Structure and Features

- 4-way Equal Load
- Heavy load, high rigidity
- Practically a global standard size
- Superb capability of absorbing mounting error

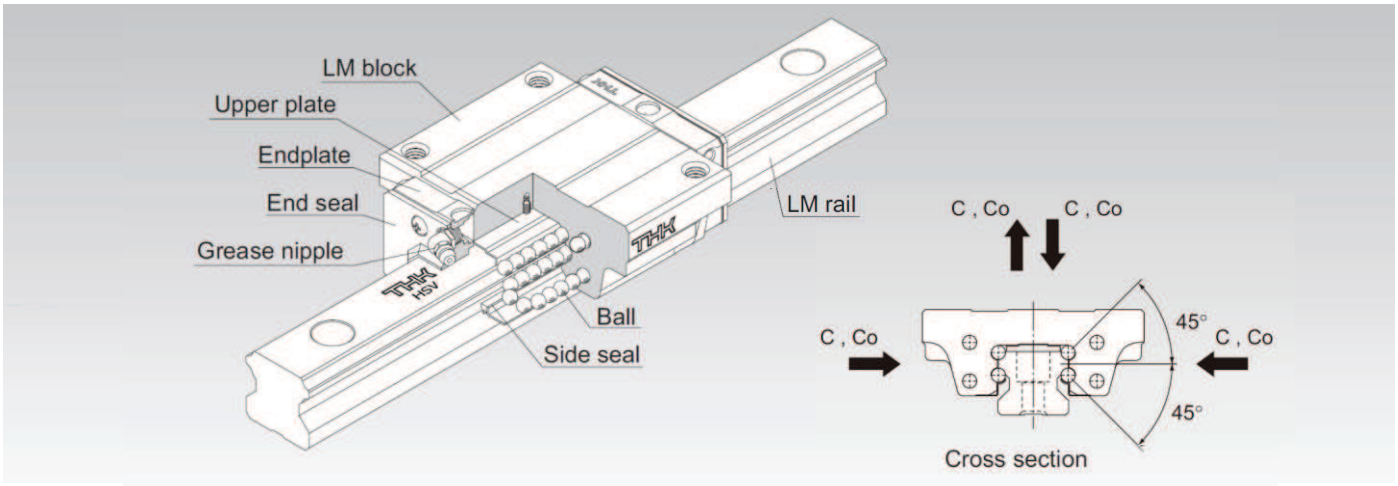

HSV-C	HSV-LC	HSV-R	HSV-LR
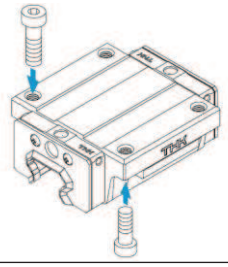	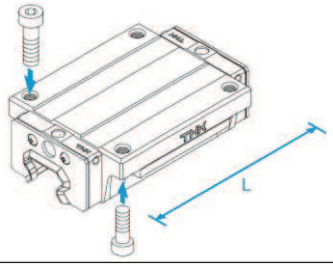	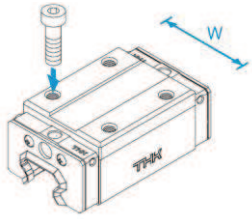	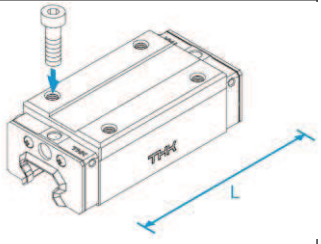
The flange of the LM block has tapped holes. Can be mounted from the top or the bottom. Used in places where the table cannot have through holes for mounting bolts.	The LM block has the same cross-sectional shape as model HSV-C, but has a longer overall LM block length (L) and a greater rated load.	With this type, the LM block has a smaller width(W) and tapped holes. Used in places where the space for table width is limited.	The LM block has the same cross-sectional shape as model HSV-R, but has a longer overall LM block length (L) and a greater rated load.

Basic Load Rating

Model No.	Basic load rating		Static permissible moment kN-m ∗				
	C kN	C_0 kN	M_A		M_B		M_C
			1 block	2 blocks	1 block	2 blocks	1 block
HSV15C/R	10.9	15.7	0.0945	0.527	0.0945	0.527	0.0998
HSV15LC/LR	14.2	22.9	0.194	0.984	0.194	0.984	0.145
HSV20C/R	19.8	27.4	0.218	1.2	0.218	1.2	0.235
HSV20LC/LR	23.9	35.8	0.363	1.87	0.363	1.87	0.307
HSV25C/R	27.6	36.4	0.324	1.8	0.324	1.8	0.366
HSV25LC/LR	35.2	51.6	0.627	3.04	0.627	3.04	0.518
HSV30C/R	40.5	53.7	0.599	3.1	0.599	3.1	0.652
HSV30LC/LR	48.9	70.2	0.995	4.89	0.995	4.89	0.852
HSV35C/R	53.9	70.2	0.895	4.51	0.895	4.51	1.05
HSV35LC/LR	65	91.7	1.49	7.13	1.49	7.13	1.37
HSV45C/R	82.2	101	1.5	8.37	1.5	8.37	1.94
HSV45LC/LR	100	135	2.59	13.4	2.59	13.4	2.6

Note) Static permissible moment ∗
1 block: static permissible moment value with 1 LM block
2 blocks: static permissible moment value with 2 blocks closely contacting with each other

Model Number Coding

※Please contact the LM rail length you need to your dealer.

Block : HSV35 LC 1 SS BLOCK

- BLOCK: Block symbol
- SS: Seal symbol (Only : SS)
- LC: Type of LM block (C / LC / R / LR)
- HSV35: Model No. (HSV15, 20, 25, 30, 35, 45)

Rail : HSV35 – 3000L RAIL

- RAIL: Rail symbol
- 3000L: LM rail length (in mm)
- HSV35: Model No. (HSV15, 20, 25, 30, 35, 45)

HSV-C/LC dimensions

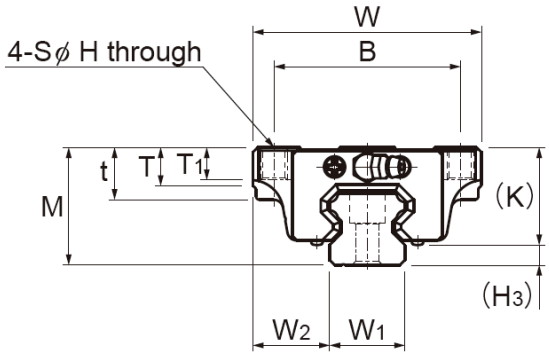

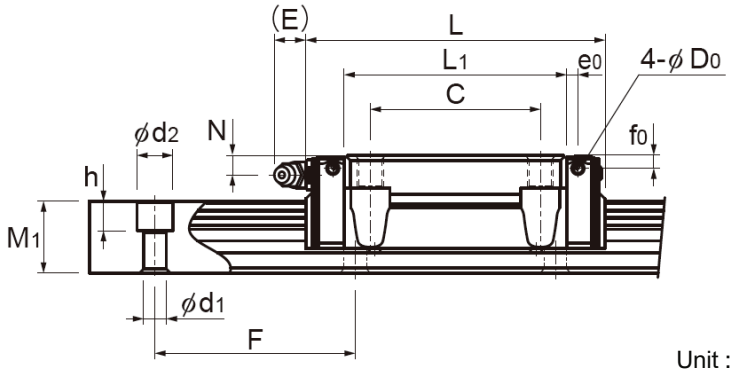

Unit : mm

Model No.	Outer dimensions			LM block dimensions													Pilot hole for side nipple			H3	Mass kg
	Height M	Width W $^{0}_{-0.05}$	Length L	W2	B	C	S	H	L1	t	T	T1	K	N	E	Grease Nipple	e0	f0	D0		
HSV15C	24	47	56.6	16	38	30	M5	4.5	38.8	11	7	7	19.3	4.3	5.5	PB1021B	3.2	3.9	3	4.7	0.2
HSV15LC	24	47	74.6	16	38	30	M5	4.5	56.8	11	7	7	19.3	4.3	5.5	B-M6F	3.2	3.9	3	4.7	0.29
HSV20C	30	63	74	21.5	53	40	M6	5.4	50.8	10	9.5	10	26	5	12	B-M6F	3.1	3.4	3	4	0.35
HSV20LC	30	63	90	21.5	53	40	M6	5.4	66.8	10	9.5	10	26	5	12	B-M6F	3.1	3.4	3	4	0.47
HSV25C	36	70	83.1	23.5	57	45	M8	6.8	59.5	16	11	10	30.5	6	12	B-M6F	3.5	4	3	5.5	0.59
HSV25LC	36	70	102.2	23.5	57	45	M8	6.8	78.6	16	11	10	30.5	6	12	B-M6F	3.5	4	3	5.5	0.75
HSV30C	42	90	98	31	72	52	M10	8.5	70.4	18	9	10	35	7	12	B-M6F	5.2	6.2	5.2	7	1.1
HSV30LC	42	90	120.6	31	72	52	M10	8.5	93	18	9	10	35	7	12	B-M6F	5.2	6.2	5.2	7	1.3
HSV35C	48	100	109.4	33	82	62	M10	8.5	80.4	21	12	13	40.5	8	12	B-M6F	5.5	5.6	5.2	7.5	1.6
HSV35LC	48	100	134.8	33	82	62	M10	8.5	105.8	21	12	13	40.5	8	12	B-M6F	5.5	5.6	5.2	7.5	2.0
HSV45C	60	120	139	37.5	100	80	M12	10.5	98	25	13	15	50	10	16	B-R1/8	6.1	6.6	5.2	10	2.8
HSV45LC	60	120	170.8	37.5	100	80	M12	10.5	129.8	25	13	15	50	10	16	B-R1/8	6.1	6.6	5.2	10	3.3

HSV-R/LR dimensions

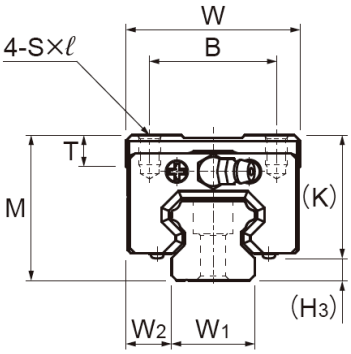

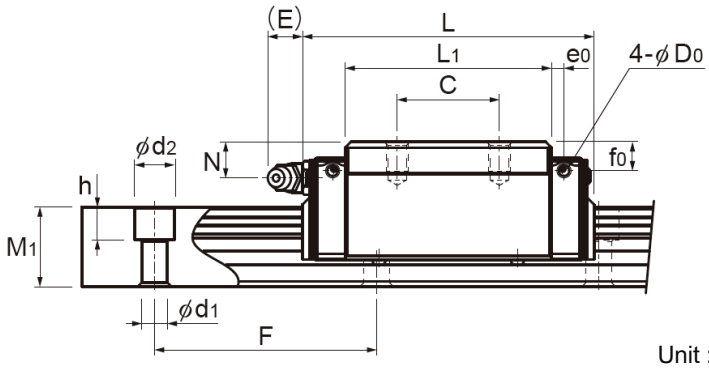

Unit : mm

Model No.	Outer dimensions			LM block dimensions										Pilot hole for side nipple			H3	Mass kg
	Height M	Width W $^{0}_{-0.05}$	Length L	W2	B	C	S×ℓ	L1	T	K	N	E	Grease Nipple	e0	f0	D0		
HSV15R	28	34	56.6	9.5	26	26	M4×5	38.8	6	23.3	8.3	5.5	PB1021B	3.2	7.9	3	4.7	0.18
HSV15LR	28	34	74.6	9.5	26	34	M4×5	56.8	6	23.3	8.3	5.5	B-M6F	3.2	7.9	3	4.7	0.26
HSV20R	30	44	74	12	32	36	M5×6	50.8	8	26	5	12	B-M6F	3.1	3.4	3	4	0.25
HSV20LR	30	44	90	12	32	50	M5×6	66.8	8	26	5	12	B-M6F	3.1	3.4	3	4	0.35
HSV25R	40	48	83.1	12.5	35	35	M6×8	59.5	9	34.5	10	12	B-M6F	3.5	8	3	5.5	0.54
HSV25LR	40	48	102.2	12.5	35	50	M6×8	78.6	9	34.5	10	12	B-M6F	3.5	8	3	5.5	0.67
HSV30R	45	60	98	16	40	40	M8×10	70.4	9	38	10	12	B-M6F	5.2	9.2	5.2	7	0.9
HSV30LR	45	60	120.6	16	40	60	M8×10	93	9	38	10	12	B-M6F	5.2	9.2	5.2	7	1.1
HSV35R	55	70	109.4	18	50	50	M8×12	80.4	11.7	47.5	15	12	B-M6F	5.5	12.6	5.2	7.5	1.5
HSV35LR	55	70	134.8	18	50	72	M8×12	105.8	11.7	47.5	15	12	B-M6F	5.5	12.6	5.2	7.5	2.0
HSV45R	70	86	139	20.5	60	60	M10×17	98	15	60	20	16	B-R1/8	6.1	16.6	5.2	10	2.6
HSV45LR	70	86	170.8	20.5	60	80	M10×17	129.8	15	60	20	16	B-R1/8	6.1	16.6	5.2	10	3.1

HSV LM rail dimensions

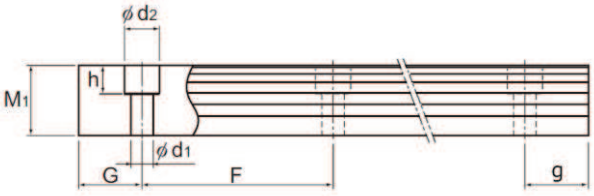

Unit : mm

Model No.	Width W1	Height M1	Pitch F	d1×d2×h	LM rail length (G,g)		Mass kg
HSV15	15	15	60	4.5×7.5×5.3	3000 (20,40)	–––	1.5
HSV20	20	18	60	6×9.5×8.5	3000 (20,40)	4540 (20,20)	2.3
HSV25	23	22	60	7×11×9	3000 (20,20)	4540 (20,20)	3.3
HSV30	28	26	80	9×14×12	3000 (20,20)	4520 (20,20)	4.8
HSV35	34	29	80	9×14×12	3000 (20,20)	4520 (20,20)	6.6
HSV45	45	38	105	14×20×17	3000 (20,40)	4560 (22.5,22.5)	11